TrynEx International, LLC, 531 Ajax Drive, Madison Heights, MI 48071-2429 • www.snowexproducts.com

October 15, 2026
Lit. No. 94118, Rev. 05

SnowEx®

Automatixx®
ATTACHMENT SYSTEM

7600, 8000

Regular Duty Snowplow

Blade Assembly 77710, 77715
Big Box Assembly 77810-1, 77810-3

Parts List

AUTHENTIC SnowEx® PARTS & ACCESSORIES

A DIVISION OF DOUGLAS DYNAMICS, LLC

TABLE OF CONTENTS

REGULAR DUTY BLADE ASSEMBLY 4

A-FRAME AND HEADGEAR ASSEMBLY 6

A-Frame Components 6

Headgear Components 8

HYDRAULIC AND ELECTRICAL COMPONENTS 10

Hydraulic Unit Components 10

Lift and Angle Rams 12

Hoses and Fittings 13

Electrical Components 14

VEHICLE-SIDE HARNESS DIAGRAM 15

HEADLAMP KITS 16–17

Blade Components

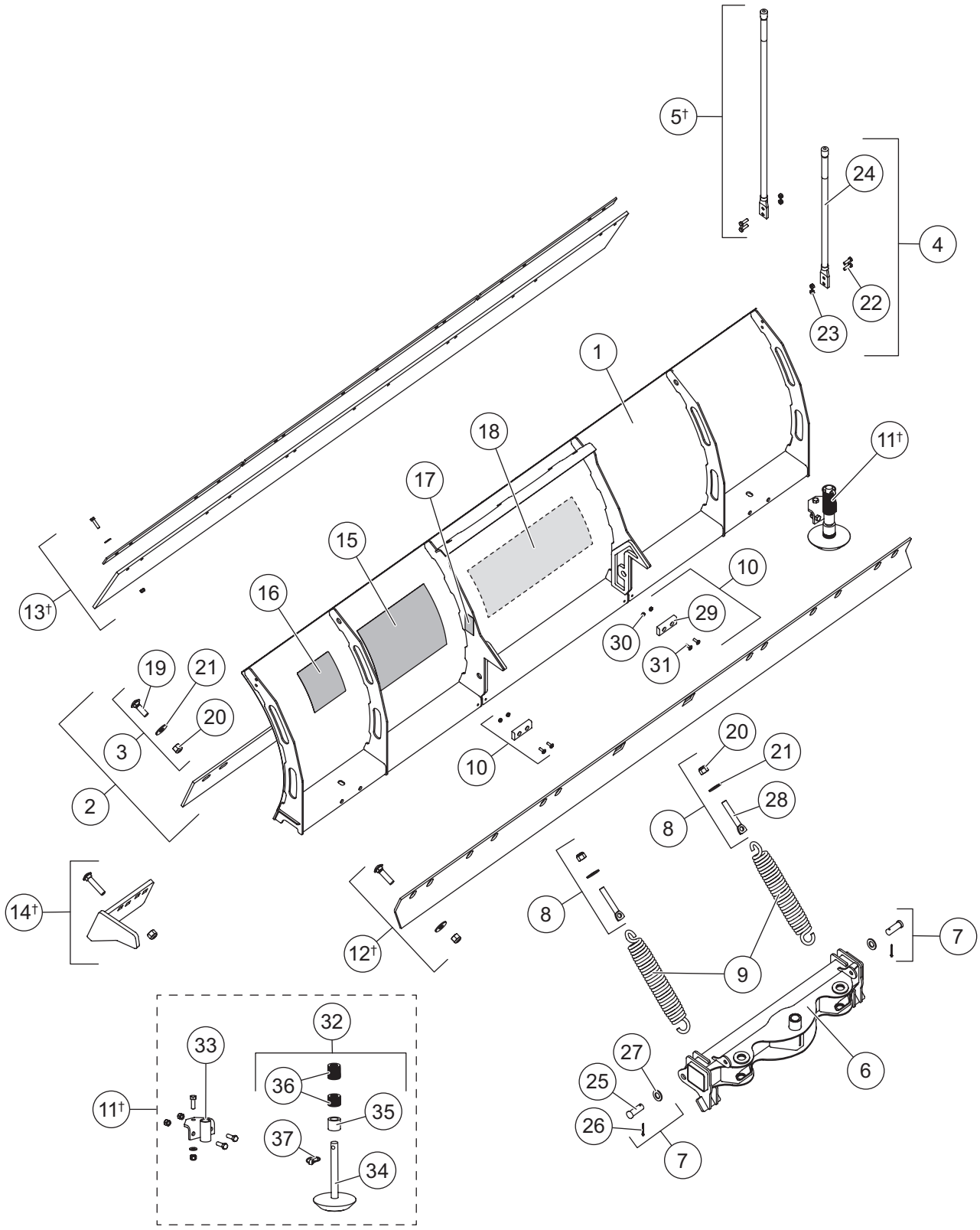

REGULAR DUTY BLADE ASSEMBLY

77710/77715 Blade Components							
Item	**Part**	**Qty**	**Description**	**Item**	**Part**	**Qty**	**Description**
1	84557	1	7600RD Blade w/ Labels	9	23039	2	Trip Spring
	84558	1	8000RD Blade w/ Labels	10	63976	2	Push Stop Kit
2	84445	1	5/16 Cutting Edge Kit – 7600RD	11†	84506-1	1	Shoe Assembly Kit – HD, RD, LT
	84467	1	5/16 Cutting Edge Kit – 8000RD	12†	84463	1	Back Drag Edge – 7'6"
ns	42417†	1	3/8 Cutting Edge Kit – 7600RD		84464	1	Back Drag Edge – 8'
	40552†	1	3/8 Cutting Edge Kit – 8000RD	13†	84514	1	Rubber Deflector Kit – 7'6"
ns	40695†	1	1/2 Cutting Edge Kit – 7600RD		84517	1	Rubber Deflector Kit – 8'
	40696†	1	1/2 Cutting Edge Kit – 8000RD	14†	43885	1	Curb Guard Kit
3	69425	1	Cutting Edge Kit Bolt Bag	15	52203	1	Label – Attach/Detach, Automatixx®
4	84525	1	24" Blade Guide Kit	16	59900	1	Label – Warning/Caution, Snowplows
5†	84477	1	36" Poly Blade Guide Kit	17	29256	2	Label – Warning, Foot Crush
6	84574	1	Quadrant – RD	18	77702	1	Label – Logo, RD Blade Center
7	84631	2	3/4 x 2 Clevis Pin Kit w/Cotter	ns	84641	1	Blade Label Kit – RD
8	84702	2	Eyebolt Kit				
Item 2			**84445/84467 5/16 Steel Cutting Edge Kit**				
		1	5/16 Steel Cutting Edge	3	69425	1	Cutting Edge Kit Bolt Bag
Item 3			**69425 Cutting Edge Kit Bolt Bag**				
19		10	5/8-11 x 2 Carriage Bolt G5	21		10	5/8 Hardened Flat Washer
20		10	5/8-11 Hex Locknut GB				
Item 4			**84525 24" Blade Guide Kit**				
22		4	5/16-18 x 1 Hex Cap Screw G5	24		2	24" Poly Blade Guide w/ Label
23		4	5/16-18 Hex Locknut GB				
Item 7			**84631 3/4 x 2 Clevis Pin Kit w/Cotter**				
25		1	3/4 x 2 Clevis Pin	27		1	3/4 Flat Washer
26		1	5/32 x 1-1/2 Cotter Pin				
Item 8			**84702 Eyebolt Kit**				
20		1	5/8-11 Hex Locknut GB	28		1	5/8-11 x 4 Eyebolt
21		1	5/8 Hardened Flat Washer				
Item 10			**63976 Push Stop Kit**				
29		1	Bumper	31		2	1/4-20 x 3/4 Button Cap Screw w/Flange Hex Socket
30		2	1/4-20 Hex Locknut				
Item 11†			**84506 Shoe Assembly Kit**				
32	42301	2	Disc Shoe Assembly	ns	84732	1	Bolt Bag
33	84736	2	Shoe Bracket				
Item 32†			**42301 Disc Shoe Assembly**				
34	60217	1	Disc Shoe	36	91192	24	Round Flat Washer, Special
35	60045	1	Spacer	37	93010	1	7/16 x 1-3/4 Linchpin
84641 Blade Label Kit – RD							
15	52203	1	Label – Attach/Detach, Automatixx	17	29256	1	Label – Warning, Foot Crush
16	59900	1	Label – Warning/Caution, Snowplows	18	77702	1	Label – Logo, RD Blade Center
			ns = not shown				G = Grade

† Accessory only.

A- Frame Components

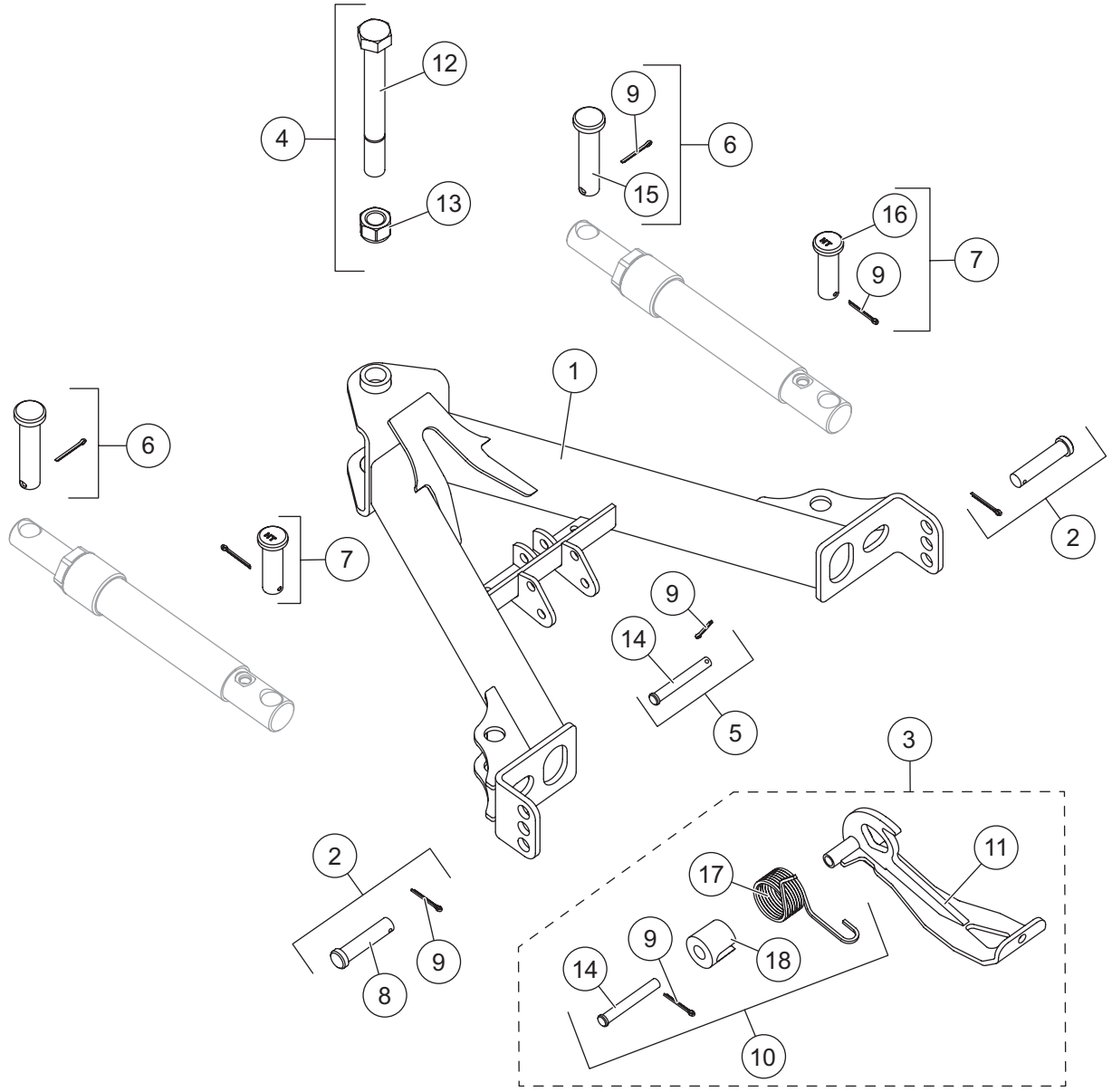

A-FRAME ASSEMBLY

A-Frame Components							
Item	**Part**	**Qty**	**Description**	**Item**	**Part**	**Qty**	**Description**
1	84588	1	A-Frame – RD	6	84633	2	1 x 4-3/4 Clevis Pin Kit – Angle Ram Rod End
2	84618	2	A-Frame Pin Kit				
3	84593	1	Stand Kit	7	84634	2	1 x 3-1/4 Clevis Pin Kit – Angle Ram Base End
4	69494	1	Pivot Bolt Kit				
5	83629	1	1/2 x 3-11/16 Clevis Pin Kit w/Cotter				
Item 2			**84618 A-Frame Pin Kit**				
8		1	3/4 x 3-1/4 Clevis Pin	9		1	5/32 x 1-1/2 Cotter Pin
Item 3			**84593 Stand Kit**				
10	84615	1	Stand Hardware Kit	11		1	Stand
Item 4			**69494 Pivot Bolt Kit**				
12		1	1-8 x 9 Hex Cap Screw Special G5	13		1	1-8 Locknut GB
Item 5			**83629 1/2 x 3-11/16 Clevis Pin Kit**				
9		1	5/32 x 1-1/2 Cotter Pin	14		1	1/2 x 3-11/16 Clevis Pin
Item 6			**84633 1 x 4-3/4 Clevis Pin Kit – Angle Ram Rod End**				
9		1	5/32 x 1-1/2 Cotter Pin	15		1	1 x 4-3/4 Clevis Pin
Item 7			**84634 1 x 3-1/4 Clevis Pin Kit – Angle Ram Base End**				
9		1	5/32 x 1-1/2 Cotter Pin	16		1	1 x 3-1/4 Clevis Pin G5
Item 10			**84615 Stand Hardware Kit**				
9		1	5/32 x 1-1/2 Cotter Pin	17		1	Stand Torsion Spring
14		1	1/2 x 3-11/16 Clevis Pin	18		1	Stand Spring Spacer
G = Grade							

Headgear Components

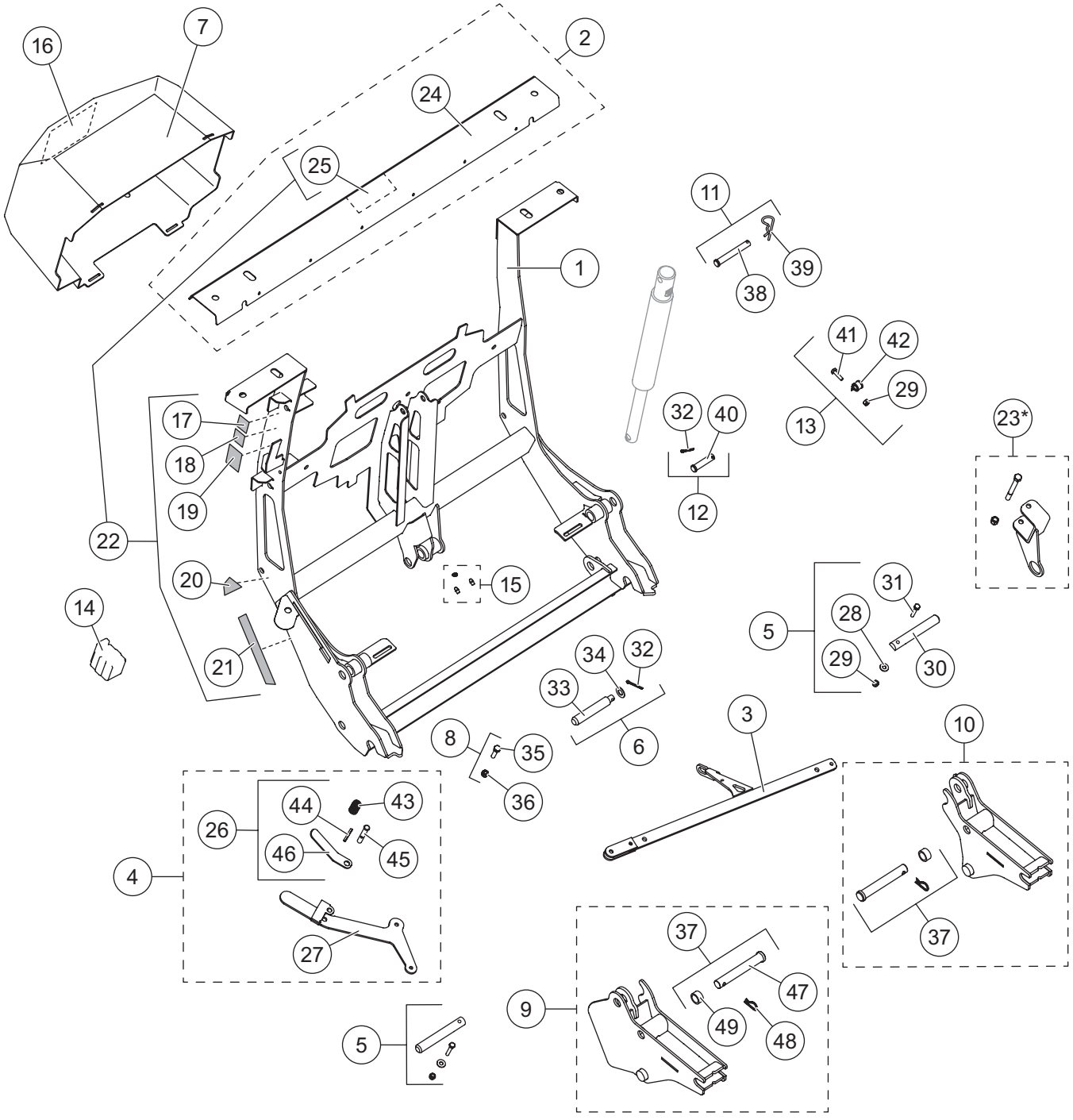

*** For use only on headgear without a welded reinforcement gusset for the stand pin bushing.**

HEADGEAR ASSEMBLY

Headgear Components							
Item	**Part**	**Qty**	**Description**	**Item**	**Part**	**Qty**	**Description**
1	84620	1	Headgear – RD (incl. item 15)	13	84778	1	Power Cable Clamp Loop Kit
2	84619	1	Light Bar Channel – RD	14	61246	1	Cable Boot
3	84598	1	Link Arm – RD	15	84616	1	Grease Zerk (pkg of 3)
4	84794	1	Attach Handle Kit – RD	16	43859	1	Label – Information, Hydraulic
5	84603	2	Attach Pin Kit	17	52206	1	Label – Power Switch, Automatixx®
6	84601	1	Link Arm Jack Stand Pin Kit	18	52207	1	Label – Operation Switch, Automatixx
7	84648	1	Hydraulic Cover (incl. item 15)	19	69689	1	Label – Logo, SECURITY GUARD™
8	84635	1	Link Arm/Attach Handle Fastener Kit	20	77717	1	Label – Upper, Automatixx
9	84606	1	RD Receiver Kit – DS	21	77718	1	Label – Lower, Automatixx
10	84607	1	RD Receiver Kit – PS	22	84456	1	Headgear Label Kit – RD
11	85199	1	Lift Ram Base Pin Kit	23*	84790	–	Stand Pin Support Kit
12	84627	1	Lift Ram Rod Pin Kit				
Item 2			**84619 Light Bar Channel – RD**				
24		1	Light Bar	25	84553	1	Label – Logo, SnowEx® Light Bar
Item 4			**84794 Attach Handle Kit – RD**				
26	84596	1	Attach Handle Release Cam Kit	27	84457	1	Handle
Item 5			**84603 Attach Pin Kit**				
28		1	1/4 Flat Washer	30		1	Hitch Pin
29		1	1/4-20 Hex Locknut GB	31		1	1/4-20 x 1-1/2 Hex Cap Screw SS
Item 6			**84601 Link Arm Jack Stand Pin Kit**				
32		1	5/32 x 1-1/2 Cotter Pin	34		1	1/2 Flat Washer Type B Narrow SS
33		1	Stand Actuator Pin				
Item 8			**84635 Link Arm/Attach Handle Fastener Kit**				
35		1	5/16-18 x 1-1/4 Hex Cap Screw G5	36		1	5/16-18 Hex Locknut GB
Item 9			**84606 RD Receiver Kit – DS**				
		1	Receiver, DS	37	84611	1	Receiver Pin Kit
Item 10			**84607 RD Receiver Kit – PS**				
		1	Receiver, PS	37	84611	1	Receiver Pin Kit
Item 11			**85199 Lift Ram Base Pin Kit**				
38		1	1/2 x 2-7/8 Clevis Pin	39		1	1/8 Hairpin Cotter
Item 12			**84627 Lift Ram Rod Pin Kit**				
32		1	5/32 x 1-1/2 Cotter Pin	40		1	1/2 x 2-1/8 Clevis Pin
Item 13			**84778 Power Cable Clamp Loop Kit**				
29		1	1/4-20 Hex Locknut GB	42	65340	1	#10 Clamp Loop
41		1	1/4-20 x 1 Hex Cap Screw G5				
Item 22			**84456 Headgear Label Kit – RD**				
17	52206	1	Label – Power Switch, Automatixx	20	77717	1	Label – Upper, Automatixx
18	52207	1	Label – Operation Switch, Automatixx	21	77718	1	Label – Lower, Automatixx
19	69689	1	Label – Logo, SECURITY GUARD	25	84553	1	Label – Logo, SnowEx Light Bar
Item 26			**84596 Attach Handle Release Cam Kit**				
43		1	Stand Lock Pin Spring	45		1	Handle Lock Pin
44		1	3/16 x 1-3/8 Roll Pin SS	46		1	Handle Lock Pin Lever
Item 37			**84611 Receiver Pin Kit**				
47	95739	1	3/4 x 5 Clevis Pin HT	49	63211	1	Spacer
48	42142	1	R-Pin Cotter				
SS = Stainless Steel			HT = Heat Treated				G = Grade

* For use only on headgear without a welded reinforcement gusset for the stand pin bushing.

Hydraulic Unit Components

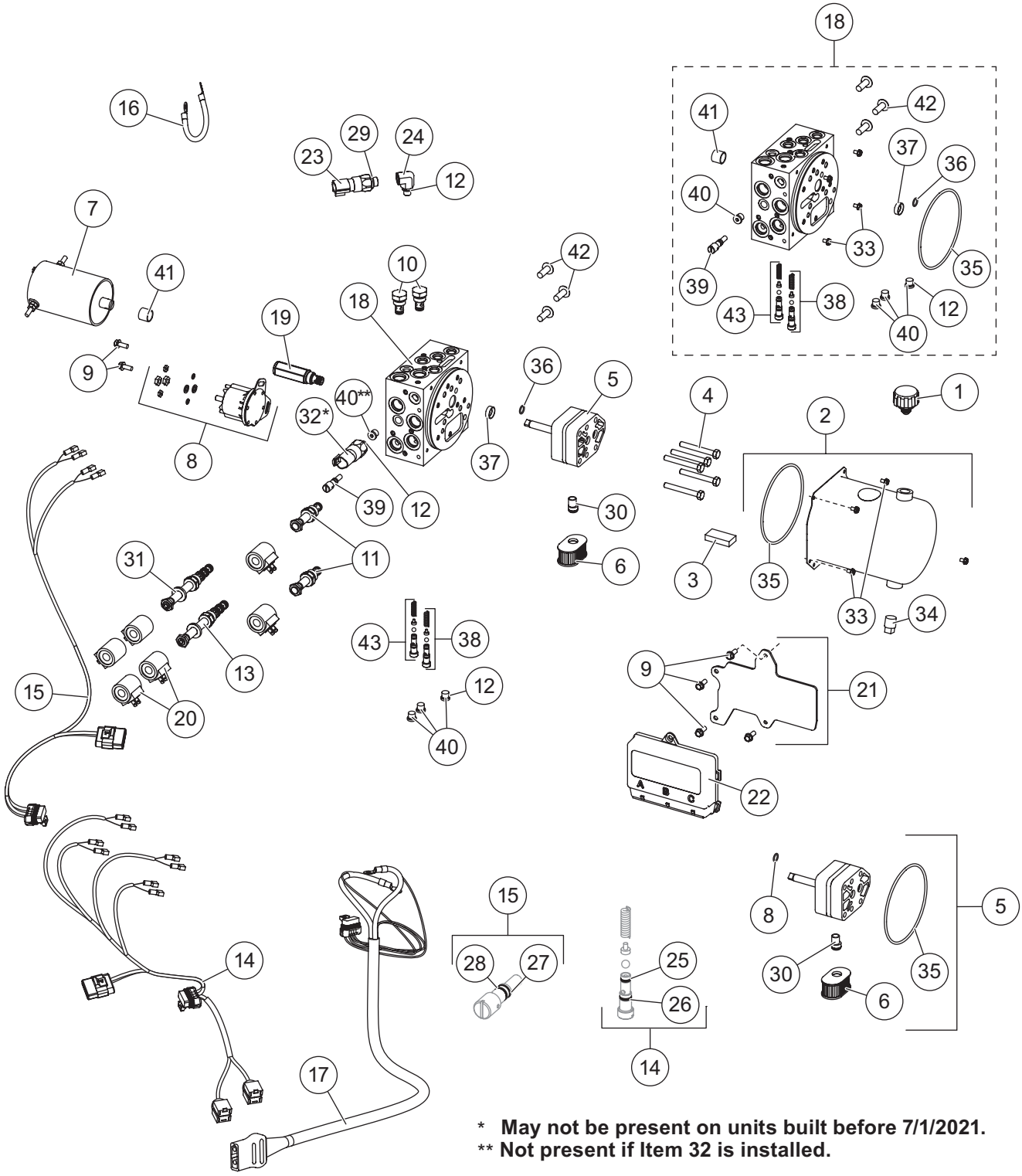

* **May not be present on units built before 7/1/2021.**
** **Not present if Item 32 is installed.**

52649 Hydraulic Unit							
Item	**Part**	**Qty**	**Description**	**Item**	**Part**	**Qty**	**Description**
1	48278	1	Breather	17	52291	1	Snowplow Battery Cable
2	52289	1	Reservoir Kit	18	52257	1	Manifold Assembly w/o Valves RD/LT
3	73897	1	Magnet	19	42889	1	Relief Valve 4000 psi
4	90073	5	5/16-18 x 2-1/4 Hex Cap Screw G5	20	52294	6	Coil
ns	52252	1	Seal Repair Tool Kit w/Seal	21	52293-1	1	Plate, Module
5	52288	1	Hydraulic Pump Kit	22	52292-2	1	Module, Plow Control
6	48281	1	Filter	23	84838	1	Pressure Switch
ns	52251	1	Bearing Repair Tool Kit w/Bearing	24	52295	1	Elbow, 90° –4 M ORB/–6 F ORB
7	52299	1	Motor	25	55371	2	O-Ring -008
8	52290	1	Motor Relay Kit, FLEET FLEX System	26	25731	2	O-Ring -010
9	44355	6	1/4-20 x 5/8 Hex Washer-Head	27	48239	1	O-Ring -106
10	84934	2	Check Valve	28	48240	1	Back-Up Ring -106
11	84936	2	Valve, 2-Way NC w/Rev Flow	29	56569	5	O-Ring -906
12	44343	6	O-Ring -904	30	10887	1	Inlet Fitting
13	52285	1	Valve, 4-Way, 3-Position Closed Center	31	84937	1	Valve, 4-Way, 3-Position
				ns		3	Fuse, 5A Mini Automotive-Style (for items 25 and 26)
14	70448	1	Plow Control Harness, 4-Coil				
15	52077	1	Plow Control Harness, 2-Coil	32	83859	1	Pressure Switch (Scrape Maxx™ down-force feature)
16	29071	1	Vehicle Battery Cable 8"				
O-Ring Service Kits							
–	52298-2	–	O-Ring Kit	–	48310	–	Seal Kit, 2-Way Valves
–	48309	–	Seal Kit, 3-Way & 4-Way Valves				
Item 2			**52289 Reservoir Kit**				
33	66607	4	#10-24 x 5/16 Machine Screw	35	66519	1	O-Ring 2-250
34	92079	1	Plug, Square 3/8 NPTF				
Item 18			**52257 Manifold Assembly w/o Valves HD**				
12	44343	5	O-Ring -904	39	48517	1	Quill
33	66607	4	#10-24 x 5/16 Machine Screw	40	44344	4	Plug, Hex Socket –4 M ORB
35	66519	1	O-Ring 2-250	41†	56364	1	Bearing Sleeve
36	56274	1	O-Ring -013	42	98043	3	3/8-16 x 1 Button Cap Screw
37*	66515	1	Pump Shaft Seal	43	52284	1	Relief Valve (1 set)
38	52282	1	Relief Valve (1 set)				
ns = not shown			F = Female	M = Male			G = Grade

* Use 52252 tool to install.

† Use 52251 tool to install.

Go to *www.snowexproducts.com* for hydraulic unit service information and specifications.

Lift and Angle Ram Components

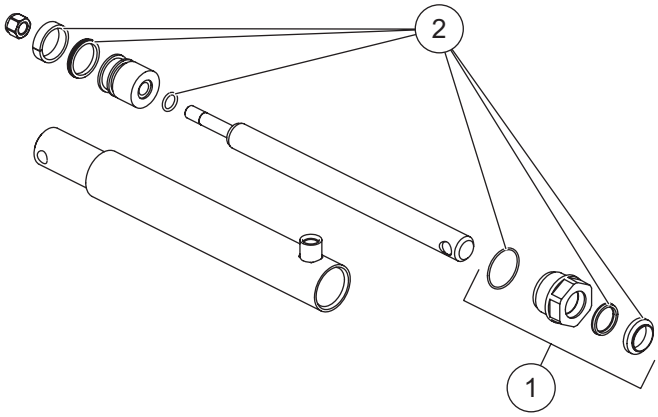

90920 Lift Ram Assembly 1-1/2 x 9 DA (Black) 84424* Lift Ram Assembly 1-1/2 x 9 DA (Red)			
Item	**Part**	**Qty**	**Description**
1	52277	1	Gland Nut Assembly
2	52302	1	Seal Kit 1-1/2 DA Ram

* Discontinued

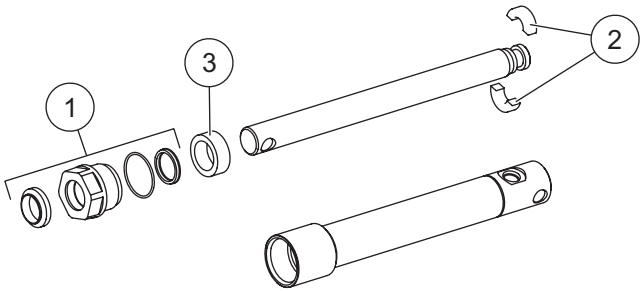

100264 Angle Ram Assembly 1-1/2 x 8 (Black) 84427* Angle Ram Assembly 1-1/2 x 8 (Red)			
Item	**Part**	**Qty**	**Description**
1	48985	1	Gland Nut Assembly
2	57879	1	1-1/2 Split Bearing Kit
3	56537	1	Spacer

* Discontinued

Hoses and Fittings

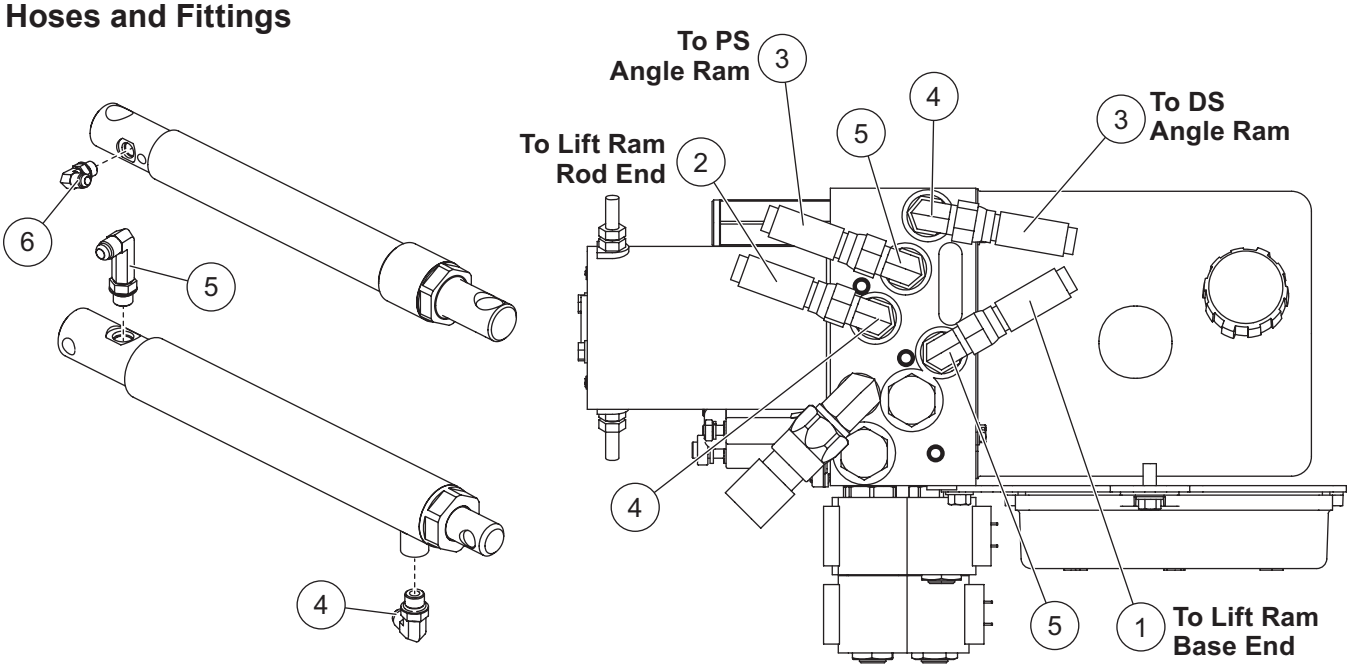

Hoses and Fittings							
Item	**Part**	**Qty**	**Description**	**Item**	**Part**	**Qty**	**Description**
1	84446	1	Hose, 1/4 x 14 w/F JIC Ends	5	40572	3	Elbow, Extra Long 90° –6 M JIC/ –6 M ORB
2	40570	1	Hose, 1/4 x 22 w/F JIC Ends				
3	52304	2	Hose, 3/8 x 36 w/F JIC Ends	6	77929	1	Elbow, 90° –6 M JIC/–6 M ORB w/Screen
4	40571	4	Elbow, 90° –6 M JIC/–6 M ORB				
ns	56823	1	Hose Wrap				
F = Female				M = Male			ns = not shown

Electrical Components

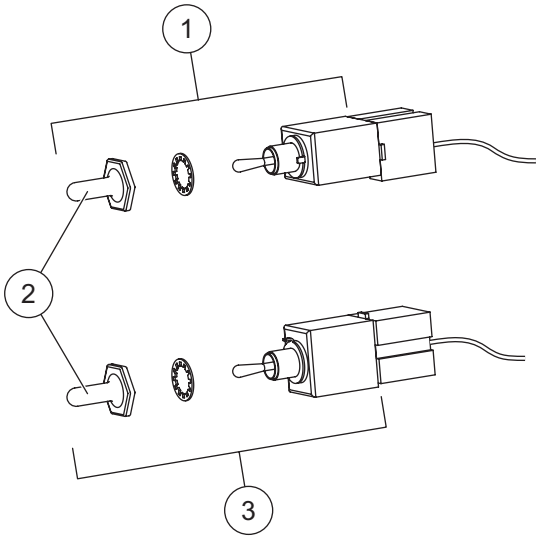

Plow-Side Electrical Components							
Item	**Part**	**Qty**	**Description**	**Item**	**Part**	**Qty**	**Description**
1	40575	1	Toggle Switch (MOM-ON, OFF, ON)	3	40576	1	Toggle Switch (MOM-ON, OFF, MOM-ON)
2	48259	2	Switch Boot				
Vehicle-Side Electrical Components							
*	72527	1	Vehicle Battery Cable	ns	48325	2	Plug Cover
*	28587	1	Vehicle Control Harness				
ns = not shown							

* For diagram see Vehicle-Side Harness Diagram.

Vehicle-Side Harness Diagram

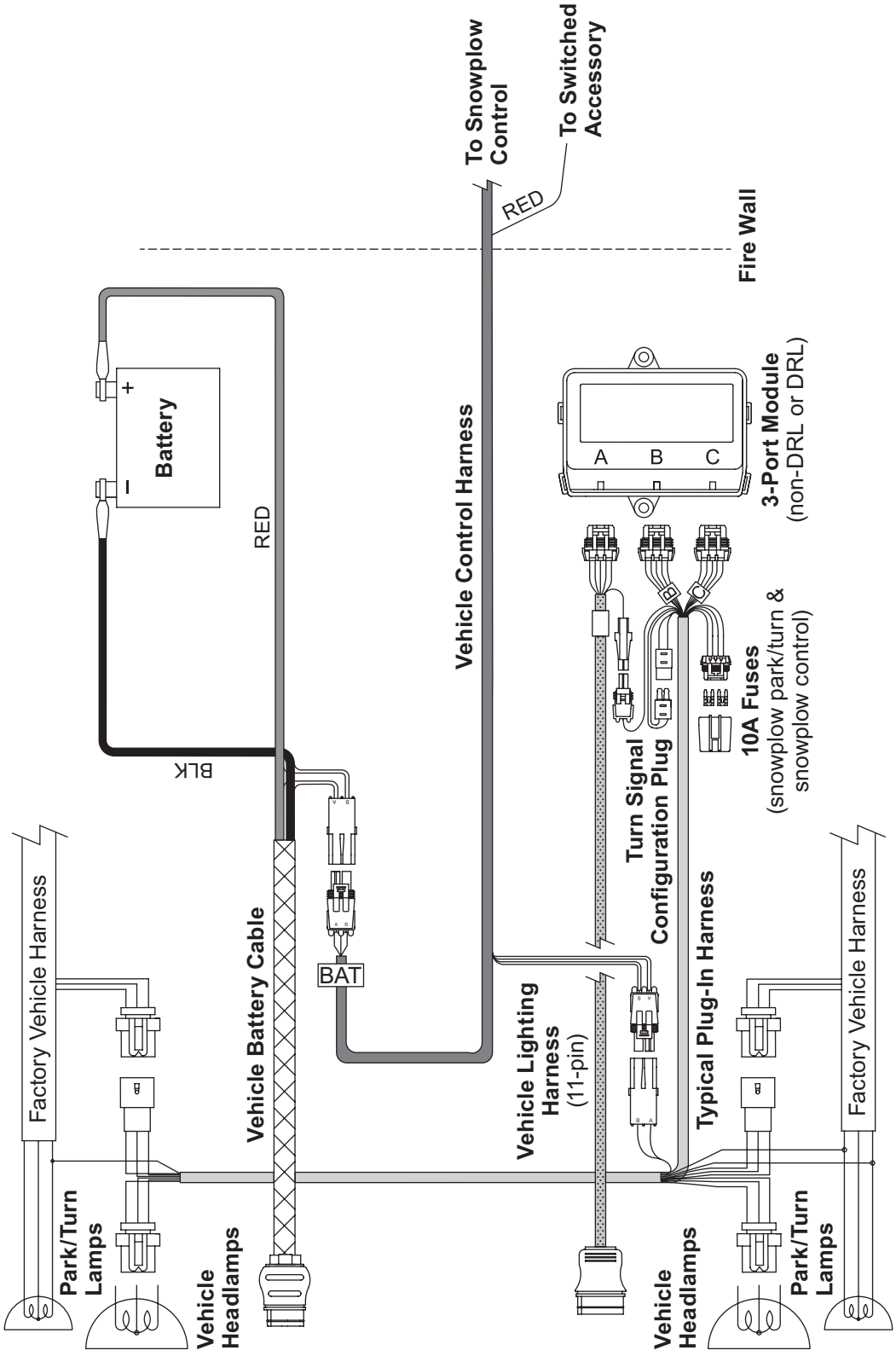

Headlamp Components – Halogen

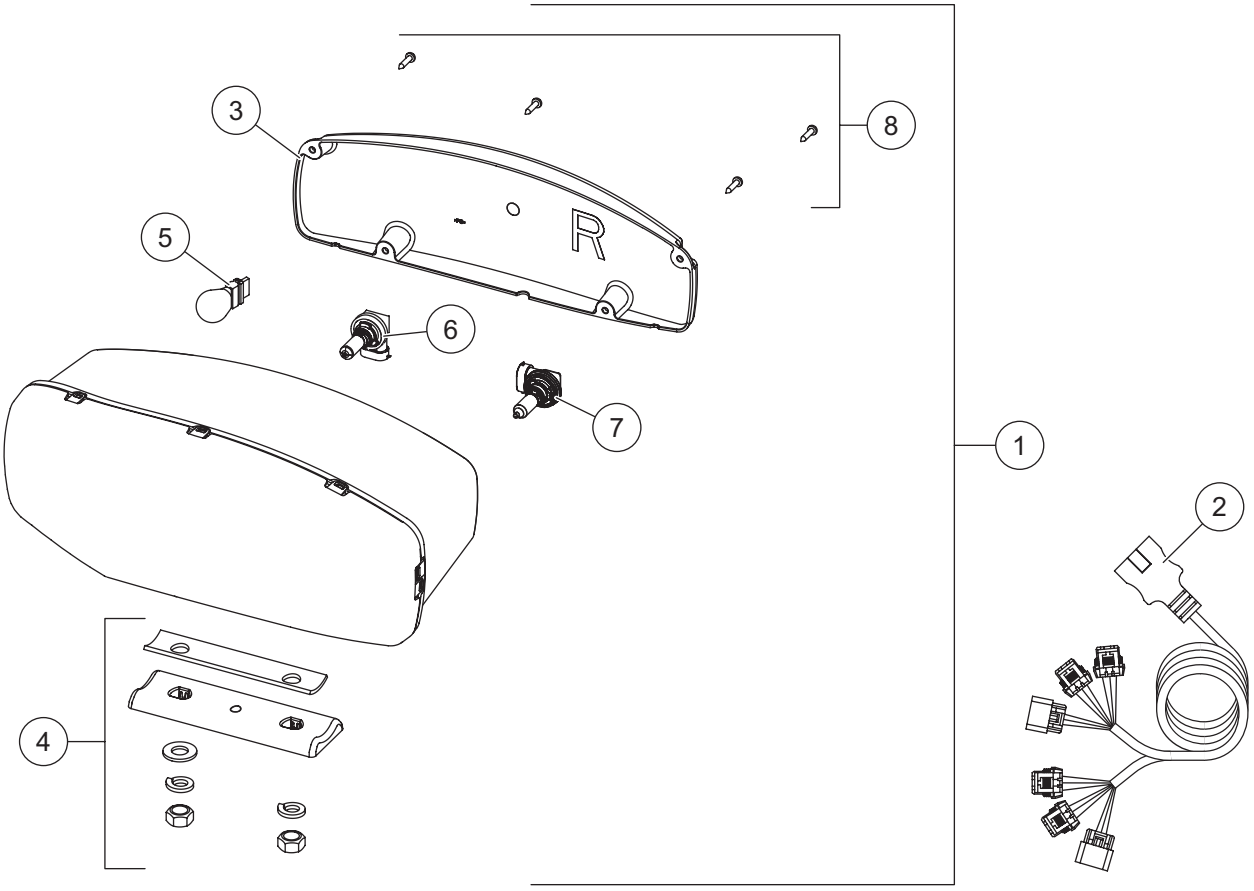

38800 Headlamp Kit H9/H11 (pair)							
Item	**Part**	**Qty**	**Description**	**Item**	**Part**	**Qty**	**Description**
1	38802	1	Headlamp Service Kit H9/H11 – PS	2	38807	1	Harness Service Kit H9/H11
ns	38801	1	Headlamp Service Kit H9/H11 – DS				
Item 1	**38801/38802 Headlamp Service Kit H9/H11 – PS/DS**						
3	38803	1	Rear Cover Kit H9/H11 – PS	6	38811	1	Headlamp Bulb Service Kit H11
ns	38812	1	Rear Cover Kit H9/H11 – DS	7	38809	1	Headlamp Bulb Service Kit H9
4	38804	1	Mounting Hardware Kit H9/H11	8	38808	1	Cover Screws Service Kit H9/H11 (pkg of 4)
5		1	Park/Turn Bulb (trade no. 4157NAK)				
ns = not shown							

Headlamp Kit – LED

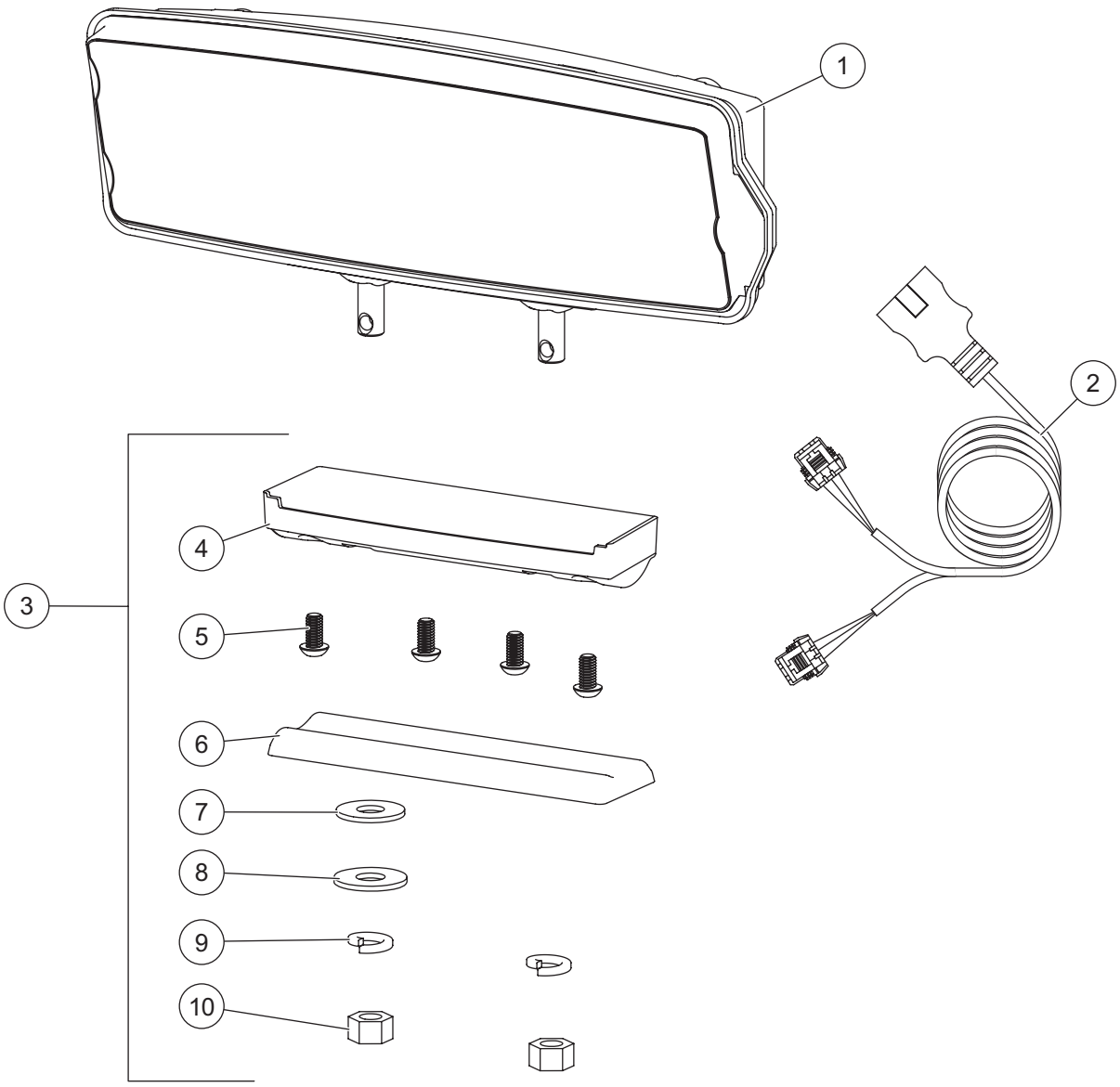

Headlamp Kit LED							
Item	**Part**	**Qty**	**Description**	**Item**	**Part**	**Qty**	**Description**
1	39901	1	Headlamp Service Kit LED – DS	3	39903	1	Mounting Hardware Kit LED
ns	39902	1	Headlamp Service Kit LED – PS	ns	72512	1	LED Harness Connector Cover (pkg of 2)
2	72548	1	Harness Service Kit LED				
Item 3			**39903 Mounting Hardware Kit LED**				
4		1	Plastic Casing	8		1	1/2 Flat Washer
5		4	1/4 Button Cap Screw	9		2	1/2 Lock Washer
6		1	Headlamp Swivel	10		2	1/2 Hex Nut
7		1	1/2 Rubber Washer	ns		1	Metal Insert
ns = not shown							

TrynEx International, LLC
531 Ajax Drive
Madison Heights, MI 48071-2429
www.snowexproducts.com

A DIVISION OF DOUGLAS DYNAMICS, LLC

Copyright © 2026 Douglas Dynamics, LLC. All rights reserved. This material may not be used, reproduced, or copied in any manner, in whole or in part, in any printed, mechanical, electronic, film, or other distribution and storage media, nor analyzed or manipulated in any manner for the purpose of training artificial intelligence technologies or systems, without the written consent of TrynEx International, LLC. In accordance with Article 4(3) of the Digital Single Market Directive 2019/790, TrynEx International expressly reserves this work from the text and data mining exception. Authorization to photocopy items for internal or personal use by TrynEx International outlets or equipment owner is granted.

TrynEx International reserves the right under its product improvement policy to change construction or design details and furnish equipment when so altered without reference to illustrations or specifications used. TrynEx International or the vehicle manufacturer may require or recommend optional equipment for snow removal. Do not exceed vehicle ratings with a snowplow. TrynEx International offers a limited warranty for all equipment and accessories. See separately printed page for this important information. The following are registered (®) or unregistered (™) trademarks of Douglas Dynamics, LLC: Automatixx®, Scrape Maxx™, SnowEx®.

Printed in U.S.A.